PROJECT 46: Design and Analysis of Hybrid Full Adder by using Cadence Virtuoso

A Comprehensive Study of Analog Circuits

By: Priya Chaudhary, Astitva Johri and
Bhavya Solanki

Chapters:

List of Figures……..…… 3

1. Introduction …….. 4
2. Brief Description…… 5
3. Circuit Design……. 6-8
   3.1 Schematic Design……... 6
   3.2 Simulation Setup...…….. 6
   3.3 Transient Response……..……..……... 7
4. Simulation Results…….. 9
5. Advantages and Disadvantages…….. 10
   5.1 Advantages……. 10
   5.2 Disadvantages……. 10
6. Conclusion…….. 11
7. Frequently Asked Questions (FAQs)…….. 12

LIST OF FIGURES

Figure 3.1 Circuit of Hybrid Full Adder ……..…..7
Figure 3.2 Symbol of Hybrid Full Adder ……..……..…...8
Figure 3.3 Testbench of Hybrid Full Adder ……..…..…..8
Figure 4.1 Simulation Results of Hybrid Full Adder ……..9

1. INTRODUCTION

A full adder is an essential combinational circuit used in arithmetic operations within digital systems. It plays a crucial role in performing binary addition, which is fundamental to microprocessors, digital signal processors, and various computing architectures. A standard full adder takes three binary inputs: A, B, and Carry-in, producing two outputs: Sum and Carry-out. However, conventional full adders often suffer from high power consumption, increased delay, and large area requirements.

To overcome these challenges, a hybrid full adder is designed using a combination of different logic styles, including CMOS logic, pass transistor logic (PTL), and transmission gate logic. By leveraging the strengths of each logic type, the hybrid approach achieves a significant reduction in power consumption and delay while maintaining a compact circuit layout.

This documentation details the design and analysis of a hybrid full adder using Cadence Virtuoso, a leading tool for VLSI design and simulation.

2. BRIEF DESCRIPTION

The hybrid full adder integrates multiple logic design techniques to optimize performance.

The key components of the design include:

- **XOR/XNOR Gates**: Used for sum generation, implemented efficiently using transmission gate logic and PTL.
- **Multiplexer-based Carry Generation**: Ensures minimal delay and reduced transistor count.
- **Pass Transistor Logic (PTL)**: Helps reduce overall power dissipation and increases switching speed.
- **CMOS Logic**: Provides robustness and ensures proper voltage levels for circuit operation.

The design is implemented and analyzed in Cadence Virtuoso, where various simulations are performed to evaluate power dissipation, propagation delay, and area efficiency. By carefully optimizing transistor sizing and logic arrangement, the hybrid full adder outperforms traditional static CMOS full adders in terms of speed and power efficiency.

3. CIRCUIT DESIGN

3.1 Schematic Design

- Create a new schematic cell view in Virtuoso.
- Use library components such as NMOS and PMOS transistors to design XOR, XNOR, and multiplexer-based circuits.
- Connect power supply (VDD, GND) and input/output terminals.
- Verify the design using electrical rule checks (ERC) and design rule checks (DRC).

3.2 Simulation Setup

he performance of the hybrid full adder is evaluated through simulations using Cadence Virtuoso. The key steps include:

- Use Virtuoso ADE (Analog Design Environment) for simulations.
- Define input stimulus using pulse voltage sources for A, B, and Carry-in.
- Configure transient analysis for dynamic response measurement.
- Time Step: Defined based on the operational frequency.
- Power Supply: Typically set to 1.2V - 1.8V depending on the technology node.
- Load Conditions: Appropriate capacitive loads are applied to mimic real-world scenarios.
- Perform DC analysis to check operating points.
- Run transient analysis to observe dynamic behavior and switching characteristics.
- Measure key parameters such as power dissipation, propagation delay, and output waveform integrity.

3.3 Transient Response

The transient response analysis provides insight into the real-time performance of the hybrid full adder. Key observations include:

- **Sum and Carry-Out Waveforms**: Verify correct output logic levels against expected truth table values.
- **Propagation Delay Measurement**: Evaluate delay from input transition to output stabilization.
- **Power Consumption Analysis**: Monitor power dissipation over time to determine efficiency.
- **Glitch and Noise Effects**: Assess circuit stability and signal integrity.

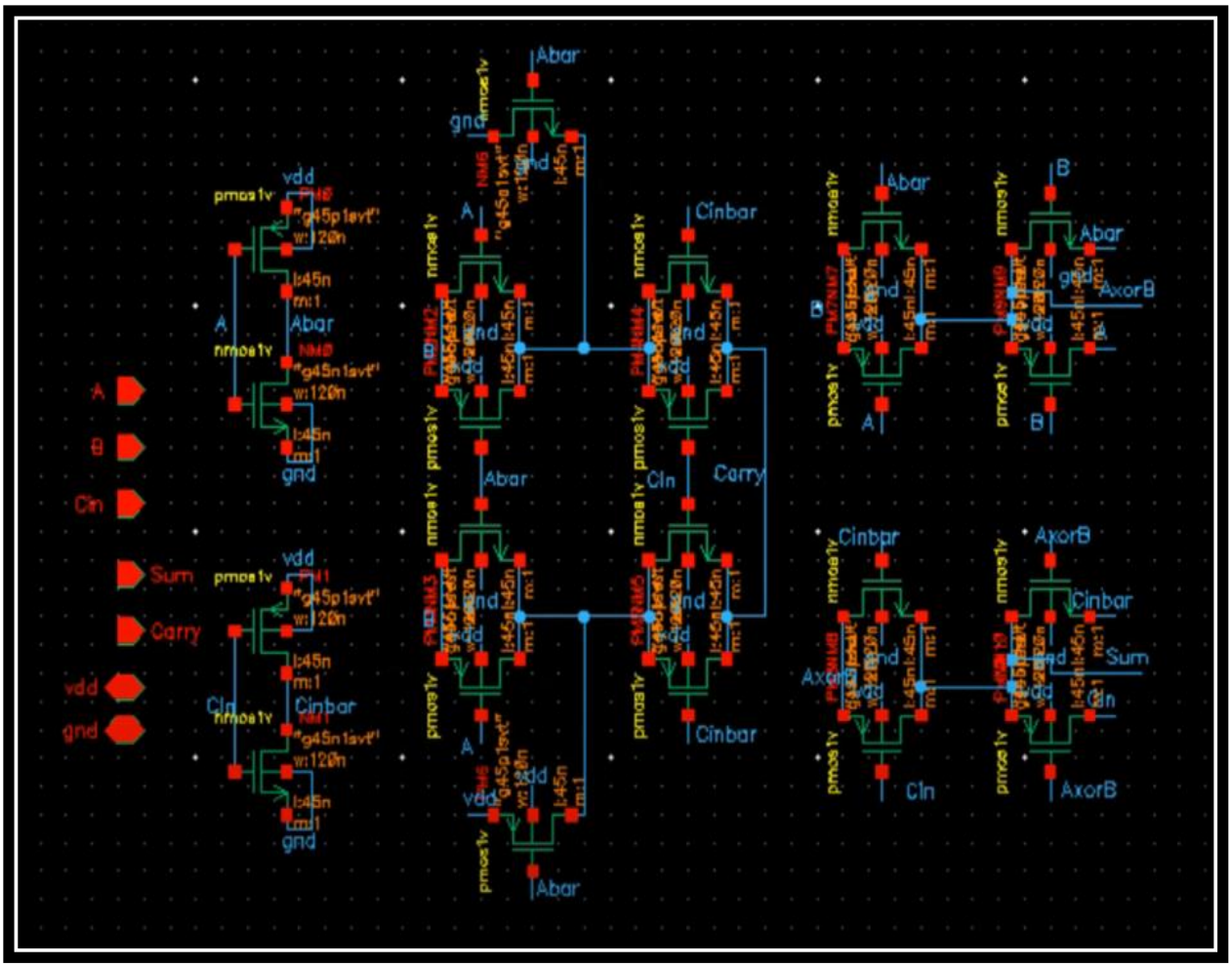

Figure 3.1 Circuit of Hybrid Full Adder

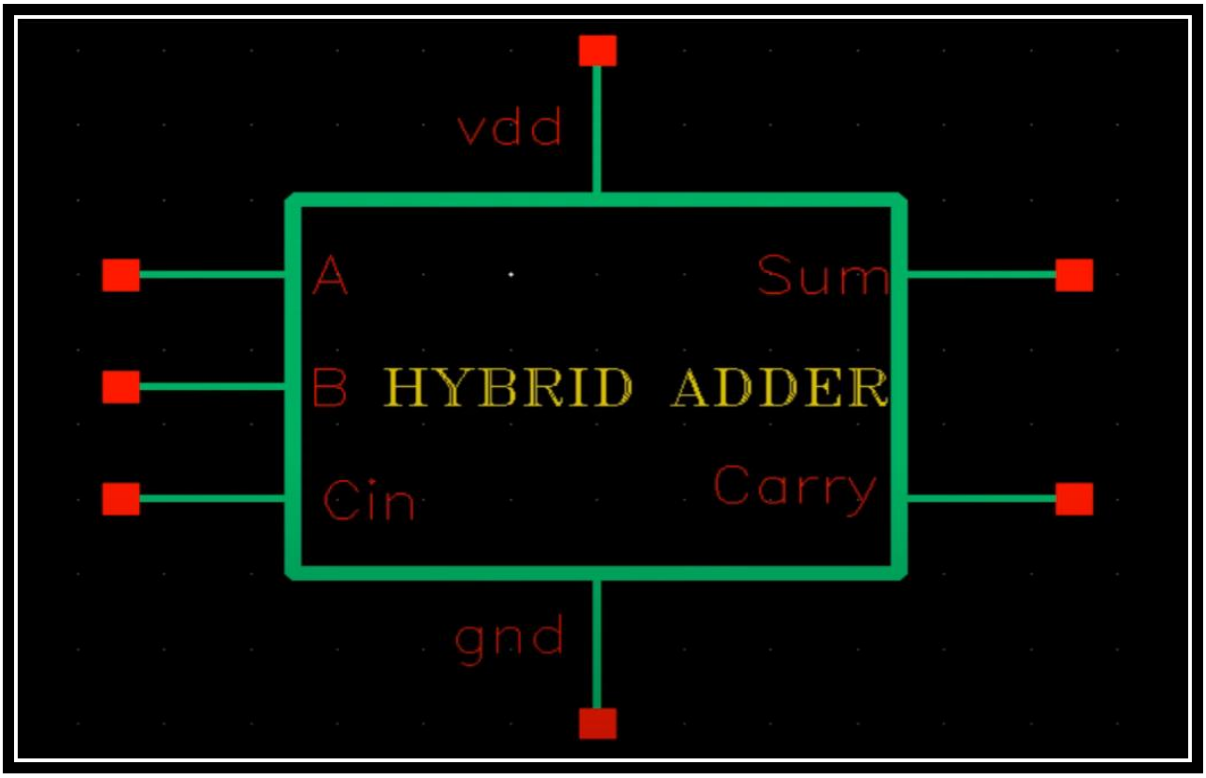

Figure 3.2 Symbol of Hybrid Full Adder

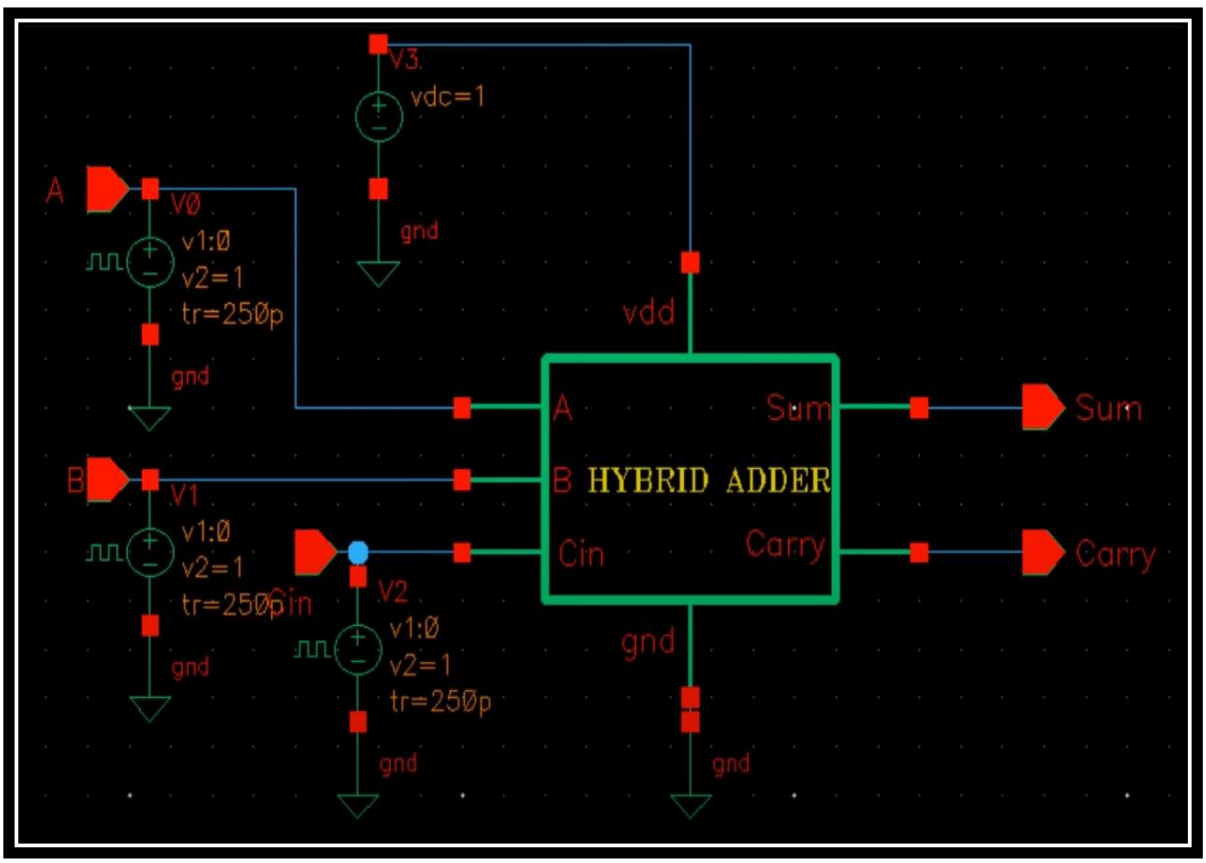

Figure 3.3 Testbench of Hybrid Full Adder

4. SIMULATION RESULTS

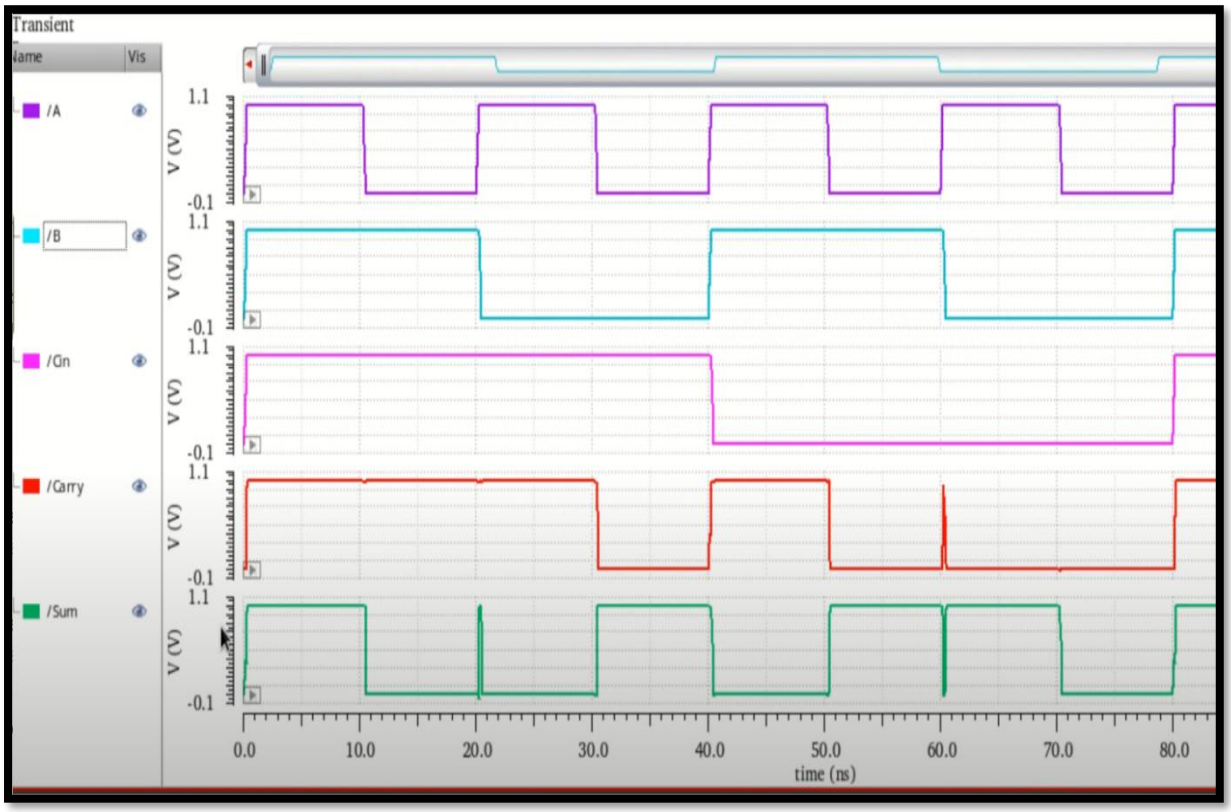

Figure 4.1: Simulation Results of Hybrid Full Adder

5. ADVANTAGES AND DISADVANTAGES

5.1 Advantages:-

1. **Low Power Consumption:** Optimized logic styles reduce switching power.
2. **High Speed:** Reduced propagation delay due to efficient transistor usage.
3. **Area Efficiency:** Fewer transistors lead to a compact layout.
4. **Improved Performance:** Combination of multiple logic styles enhances overall circuit performance.

5.2 Disadvantages:-

1. **Design Complexity:** Hybrid approach requires careful transistor sizing and optimization.
2. **Process Variability:** Performance may be affected by fabrication process variations.
3. **Increased Parasitic Effects:** Use of pass transistor logic can introduce unwanted resistive and capacitive effects.

6. CONCLUSION

The hybrid full adder designed using Cadence Virtuoso demonstrates significant improvements in power efficiency, speed, and area optimization compared to conventional full adder designs. By integrating various logic styles, the hybrid approach reduces transistor count while maintaining high performance. This makes it highly suitable for modern VLSI applications such as low-power digital signal processing (DSP), arithmetic logic units (ALUs), and microprocessor architectures.

However, due to the complexity of hybrid logic integration, designers must carefully optimize the circuit layout and transistor sizing to mitigate unwanted parasitic effects. Additionally, process variations during fabrication can impact the performance of the hybrid full adder, necessitating further optimization techniques.

Overall, the hybrid full adder offers a compelling solution for power-efficient and high-speed arithmetic operations, making it an ideal choice for next-generation digital and embedded system designs.

7. FREQUENTLY ASKED QUESTIONS (FAQs)

Q1. What is the significance of using a hybrid full adder?

Answer: The hybrid full adder leverages different logic styles to optimize power, speed, and area, making it more efficient than traditional full adders.

Q2. Why use Cadence Virtuoso for designing a full adder?

Answer: Cadence Virtuoso provides an integrated environment for schematic design, layout generation, and simulation, making it ideal for VLSI design and analysis.

Q3. What are the major challenges in designing a hybrid full adder?

Answer: Key challenges include transistor sizing, parasitic management, and ensuring balanced trade-offs between power, delay, and area.

Q4. How is the performance of the hybrid full adder evaluated?

Answer: Performance is assessed using parameters such as power consumption, propagation delay, and transistor count through Cadence Virtuoso simulations.

Q5. Can the hybrid full adder be used in large-scale digital systems?

Answer: Yes, its efficiency in power and speed makes it suitable for digital signal processing (DSP) and arithmetic logic units (ALUs) in microprocessors.